INFINITION

AT-01 Acoustic Trigger

A Rugged Muzzle-Blast Trigger Providing the Time-Zero Reference for Infinition Doppler Radar Systems

Prepared by Infinition Inc.
2965 rue des Prairies, Trois-Rivières, QC, Canada G8V 1W4 •
www.infinition.com
November 2026



1. Introduction

Every Doppler radar measurement starts with an accurate time zero: the instant the projectile leaves the muzzle. The AT-01 acoustic trigger provides that reference. Placed close to the muzzle, it detects the very strong pressure wave generated by the firing and sends a trigger signal to the acquisition system, which starts the recording and anchors the time axis of every result – muzzle velocity (V0), velocity at any distance, drag and trajectory.

Designed and manufactured by Infinition, the AT-01 is the standard trigger supplied with Infinition radar systems and the recommended choice for most applications, from small arms to medium calibre. Its heavily rugged construction allows it to work extremely close to the muzzle, shot after shot, campaign after campaign.

> **Reliable triggering with very rare false detections, no sensitivity adjustment and a single coaxial cable: the AT-01 is the trigger we recommend whenever it can be used.**

2. How the AT-01 Works

The AT-01 combines a piezoelectric pick-up with a built-in amplifier, housed in a robust brass enclosure designed to withstand the extreme pressure variations of muzzle-blast exposure. The built-in amplifier allows operation over long cable runs, between the firing point and the acquisition system.



Side view, on its tripod head



Top view of the sensor

Figure 1 – The AT-01 acoustic trigger.

- **Single coaxial cable** – power and signal share the same cable, which keeps the installation simple.
- **No sensitivity adjustment required** – the sensor is ready to use as soon as it is connected.
- **Analog differential output** – higher immunity against the electrical noise found on firing ranges.
- **Heavily rugged construction** – the transducer can be placed extremely close to the muzzle.
- **Standard mounting** – fits any standard photo tripod with a 1/4-20 mounting screw.

2.1 Trigger delay compensated by TestCenter 7

The shock wave takes a short time to travel from the muzzle to the sensor at the speed of sound. TestCenter 7 removes this delay: its Acoustic Transducer Delay (ATD) Calculator computes it from the distance between the muzzle and the AT-01 and from the air temperature, and enters the result automatically in the acquisition parameters. Time zero therefore corresponds to the true muzzle exit, and the muzzle velocity is measured accurately.

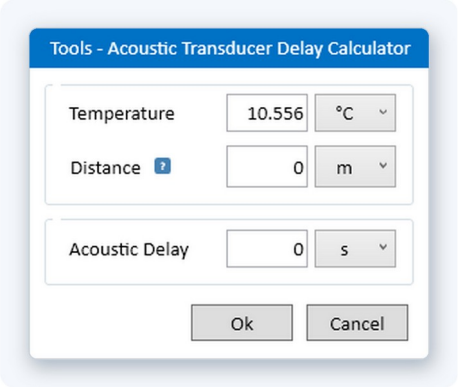

Figure 2 – The Acoustic Transducer Delay Calculator of TestCenter 7: enter the temperature and the muzzle-to-sensor distance, and the delay is applied automatically.

The compensation assumes the supersonic shock wave produced at muzzle exit. For subsonic projectiles and other low-noise shots, Infinition offers the AT-02 trigger.

3. Installation

The AT-01 is mounted on a tripod beside the weapon, close to the muzzle, and connected by its trigger cable to the trigger input of the acquisition system (JB-6e junction box or BR-2401 radar). Figure 3 shows its position in a typical set-up.

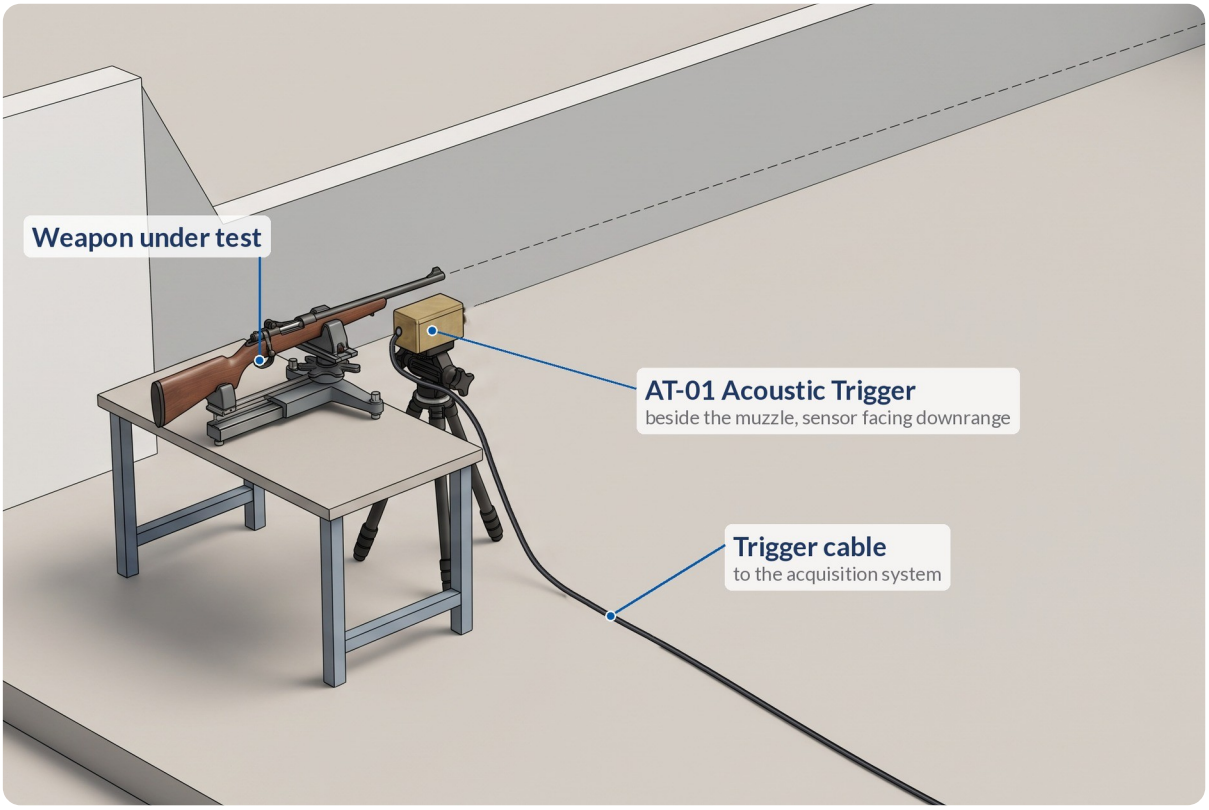

Figure 3 – The AT-01 beside the muzzle, its sensor facing downrange, connected by its trigger cable to the acquisition system (detail of a typical deployment).

The recommended distance between the sensor and the muzzle depends on the calibre:

Calibre	Recommended distance from the muzzle
Small calibre (5.56 mm, 7.62 mm, etc.)	A few centimetres
Medium calibre (12.7 mm, 20 mm, etc.)	30 to 60 cm (12 to 24 in)
Large calibre / artillery (105 mm and above)	Up to 1 m maximum

In TestCenter 7, the AT-01 is used with the Standard trigger source and a trigger level of typically 0.5 V; the trigger delay comes from the ATD Calculator. For very large calibre artillery, where the distance becomes too great for reliable acoustic detection, the OT-01 optical trigger is the right choice. The sensor can be checked before firing: arm the system and give a light tap on the tip of the AT-01 – the acquisition starts.

The AT-01 is built to resist extreme pressure exposure; as always, follow your organization's safety procedures when placing sensors near live weapons.

4. Technical Specifications

Sensor	Piezoelectric pick-up with built-in amplifier
Detection	Muzzle-blast shock wave
Output signal	± 3 V, analog differential
Typical trigger level	0.5 V (TestCenter 7)
Trigger delay	Computed by software from the speed of sound
Sensitivity adjustment	None, threshold set by software
Power supply	12 V, 2 mA – power and signal on the same cable
Operating temperature	-20 °C to +50 °C
Enclosure	Heavily rugged brass enclosure, manufactured by Infinition
Mounting	Standard photo tripod, 1/4-20 screw
Weight	1.0 kg
Compatibility	JB-6e junction box, BR-2401 integrated acquisition and all Infinition radar systems operated with TestCenter 7
Cables	Trigger cables of 20, 50, 75 and 100 m, with or without cable reel

5. AT-01 or OT-01?

Infinition offers two trigger sensors. Both connect to the same trigger input and work with the same cables and the same TestCenter 7 settings. The AT-02 trigger is also available for low-noise and subsonic shots, such as suppressed weapons, air rifles, quiet ammunition and subsonic ammunition. A TTL signal from the range instrumentation (range timing system, firing circuit) can also be used as trigger source through the optional BNC adapter.

Criteria	AT-01 (acoustic)	OT-01 (optical)
Detects	Muzzle-blast shock wave	Muzzle flash, rocket motor ignition, explosions
Trigger delay	Small, computed by TestCenter 7 from distance and temperature	None – speed of light
False-trigger resistance	Excellent – very rare false triggers	Good – sensitive to changes in ambient light
Placement	Close to the muzzle (a few cm to 1 m)	Aimed at the muzzle, can stand away from the blast
Recommended for	Most applications, small to medium calibre	Large-calibre artillery, rockets, events without a usable blast

6. Availability and Support

The AT-01 is available on its own, as a spare, or as part of a complete Infinition radar system. It is supplied with its tripod mounting head; the trigger cable is ordered at the length required by the range layout, and a standard photo tripod can be supplied with it.

Infinition designs and manufactures its trigger sensors, radars, acquisition hardware and software in-house, and provides installation, on-site training and calibration services worldwide.

7. Contact

Request a quotation, a demonstration or technical information

sales@infinition.com **www.infinition.com**

Infinition Inc. · 2965 rue des Prairies, Trois-Rivières (Québec) G8V 1W4, Canada · +1 819-719-2999