INFINITION

TH-1000 Motorized Tracking Head

Pre-Programmed Azimuth and Elevation Motion that Keeps the Projectile in the Radar Beam over Long Trajectories

Prepared by Infinition Inc.
2965 rue des Prairies, Trois-Rivières, QC, Canada G8V 1W4 •
www.infinition.com
November 2026



1. Introduction

A Doppler radar measures a projectile only while the projectile stays inside the radar beam. On flat, short trajectories a fixed antenna is enough. On long-range, high-elevation or falling trajectories, the projectile eventually leaves the beam and the measurement stops. The TH-1000 motorized tracking head removes that limit.

Designed and manufactured by Infinition, the TH-1000 carries the radar and moves it in azimuth and elevation along a pre-programmed motion profile computed by TestCenter 7 from the predicted trajectory of the projectile. The radar keeps the projectile inside its beam much farther downrange, so velocity and drag are measured over a larger part of the flight – from the hypersonic regime, through the transonic zone, down to subsonic flight.

> **Longer measured trajectories, drag through the transonic zone and high-elevation firing: the TH-1000 turns a long-range Infinition radar into a tracking system.**

2. How the TH-1000 Works

On the range, the radar mounted on the TH-1000 is installed beside the gun, level with the breech or behind it, never in front of the muzzle. When the shot is fired, the TH-1000 turns and raises the antenna along the predicted trajectory, so the radar beam follows the projectile far downrange (Figure 1).

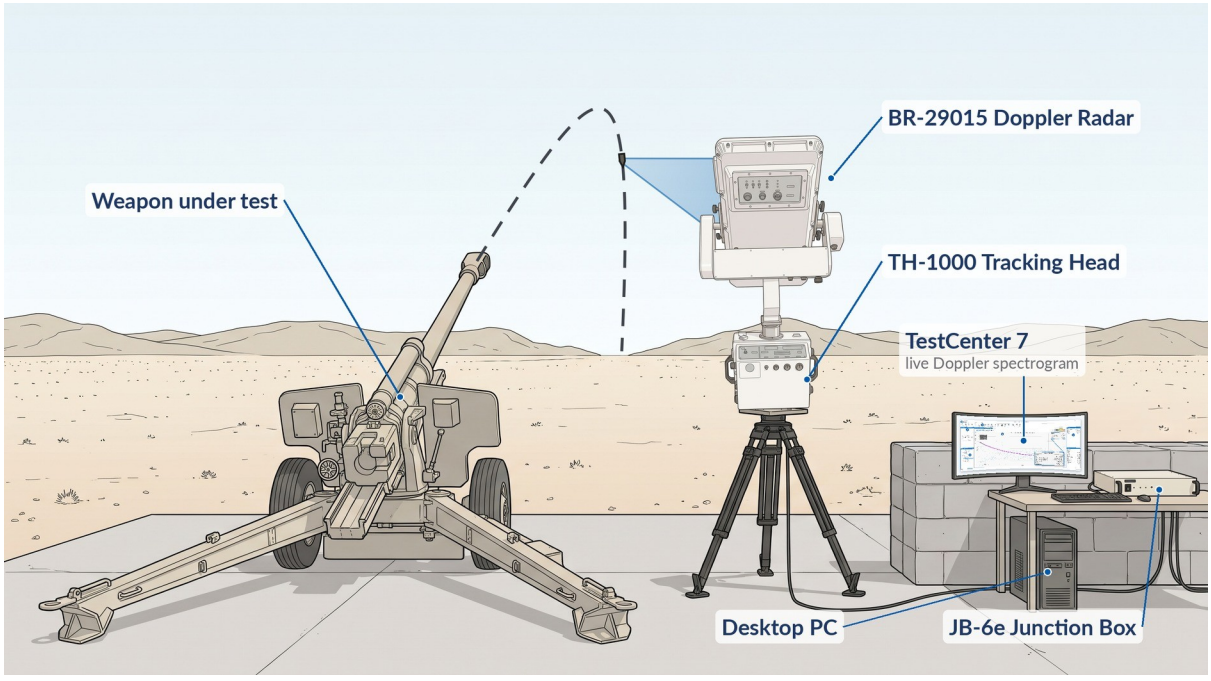

Figure 1 – Typical set-up of a BR-29015 radar system with the TH-1000 tracking head.

The TH-1000 is a two-axis positioner in tough, precisely machined aluminium. Its sealed enclosure is designed for outdoor use in humidity and rain, and to withstand the shock of firing blasts. The radar mounts directly on the TH-1000, which moves it in azimuth and elevation under the control of TestCenter 7.



In the field



With a BR-29015 radar

Figure 2 – The TH-1000 motorized tracking head.

- **Two-axis motion** – azimuth and elevation, so the antenna follows the projectile in both planes.
- **Pre-programmed motion** – the head follows a motion profile prepared before the shot from the predicted trajectory.
- **Controlled from TestCenter 7** – the motion is prepared and launched from the same workstation as the acquisition.
- **Rugged construction** – machined aluminium and a sealed enclosure for outdoor conditions and firing blasts.
- **Upgrade path** – the TH-1000 can be added later to an existing BR-29015 or BR-33030 installation.

2.1 Driven by TestCenter 7 trajectory prediction

TestCenter 7 predicts the complete flight path of the projectile with the STANAG 4355 modified point mass (MPM) model, from the measured muzzle velocity, the measured drag, the weapon data and the meteorological conditions. The predicted direction and radial velocity of the projectile then drive the TH-1000, so the antenna follows the trajectory during the shot. Because the prediction is built on actual drag measurements rather than a generic drag table, the motion profile matches the real projectile.

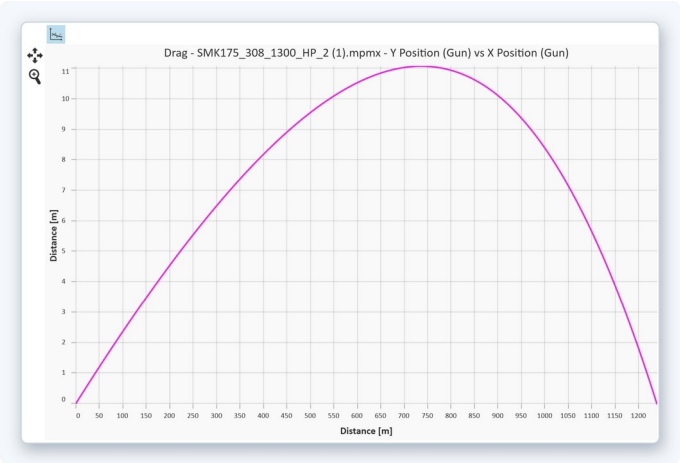

Figure 3 – Height versus downrange distance from a TestCenter 7 trajectory prediction: the predicted path is the input of the TH-1000 motion profile.

3. Motion Coverage and Applications

The TH-1000 moves the radar on two axes: in azimuth, around the vertical shaft above the drive unit, from -80° to +80°; in elevation, around the horizontal axis of the yoke, from -5° to +90°. Both axes reach 7.5°/s with an acceleration of 10°/s² (Figure 4).

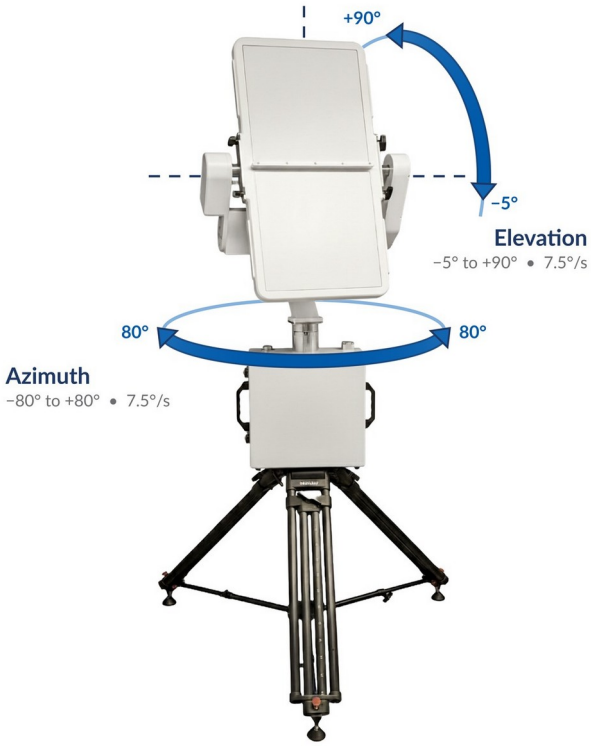

Figure 4 – The two motion axes of the TH-1000, shown with a BR-29015 radar.

Typical applications:

- **Long-range measurement** – maximize the measurement range of long-range radars.
- **Drag analysis** – measure drag across the hypersonic, transonic and subsonic regimes, including the hypersonic-to-subsonic transition of small calibres.
- **High-elevation firing** – artillery, mortars and rockets.

- **Falling trajectories** – projectiles that would drop out of a fixed radar beam.

4. Technical Specifications

Axes	Azimuth (horizontal) and elevation (vertical)
Azimuth motion range	-80° to +80°
Elevation motion range	-5° to +90°
Speed	7.5°/s, azimuth and elevation
Acceleration	10°/s², azimuth and elevation
Motion control	Pre-programmed profiles from TestCenter 7 trajectory prediction (MPM)
Control interface	Ethernet, from TestCenter 7
Construction	Machined aluminium, sealed enclosure for outdoor use
Operating temperature	-20 °C to +50 °C
Power supply	115 VAC 60 Hz 4.0 A or 230 VAC 50 Hz 2.0 A
Dimensions (base)	47 cm × 30.5 cm × 53 cm (W × D × H)
Dimensions (yoke)	65 cm × 25 cm × 61 cm (W × D × H)
Weight	53.5 kg without radar (base 39 kg, yoke 14.5 kg)

5. Compatible Radars

The TH-1000 is designed for the long-range radars of the Infinition X-band family. Both radars mount on the same TH-1000 and share the same AT-01 trigger, JB-6e acquisition and TestCenter 7 software.

Radar	Position in the range	With the TH-1000
BR-29015	X band, 15 W – from 5.56 mm up to 155 mm	Extended tracking of artillery, mortar and rocket trajectories
BR-33030	X band, long range	Maximum measured range on long and high-elevation trajectories

The radar, the JB-6e junction box and TestCenter 7 are tracking-ready: the TH-1000 can be ordered with the system or added later. The BR-1001 is a fixed-mount radar and is not used with the TH-1000.

6. Availability and Support

The TH-1000 is available as an option with a BR-29015 or BR-33030 radar system, or on its own to upgrade an existing installation. Installation and on-site training can be provided with it.

Infinition designs and manufactures its radars, tracking head, acquisition hardware and software in-house, and provides installation, on-site training and calibration services worldwide.

7. Contact

Request a quotation, a demonstration or technical information

sales@infinition.com **www.infinition.com**

Infinition Inc. · 2965 rue des Prairies, Trois-Rivières (Québec) G8V 1W4, Canada · +1 819-719-2999